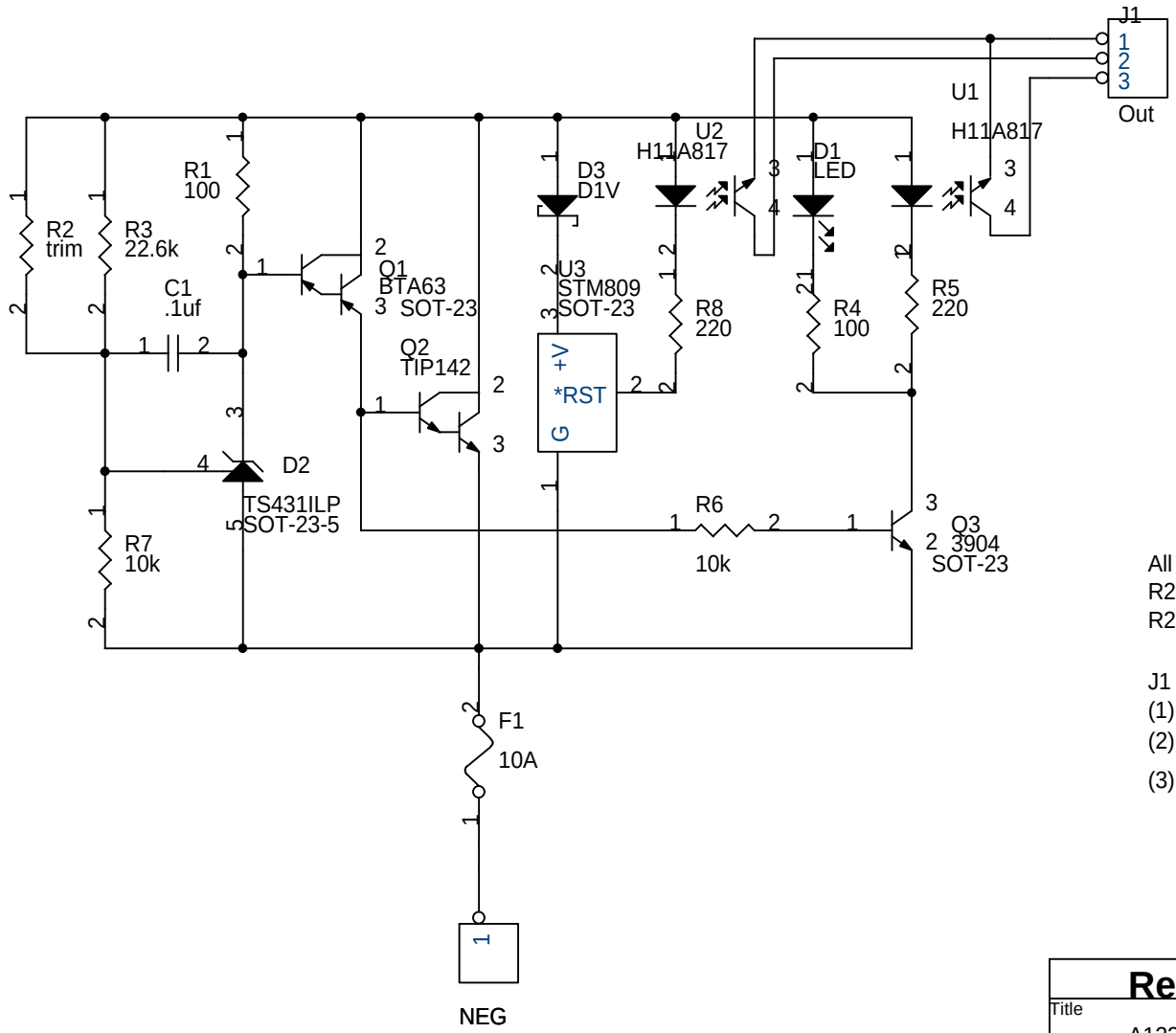


All resistors 0603 1%, cap is 0603,
R2 trim to 3.605v + - 10mv
R2= 115k-124k, nominal is 120k

J1 Outputs:
(1) Common ground
(2) Cell Low voltage (2.55v)
(3) Clamp active (3.605v)

| | | |
|---|---|---|
| **Resonant Instruments LLC** | | |
| Title: A123 cell Vclamp / Undervoltage circuit | | |
| Size: A | Document Number: {Doc} | Rev: B |
| Date: May 12 2007 | Sheet 1 of 1 | |