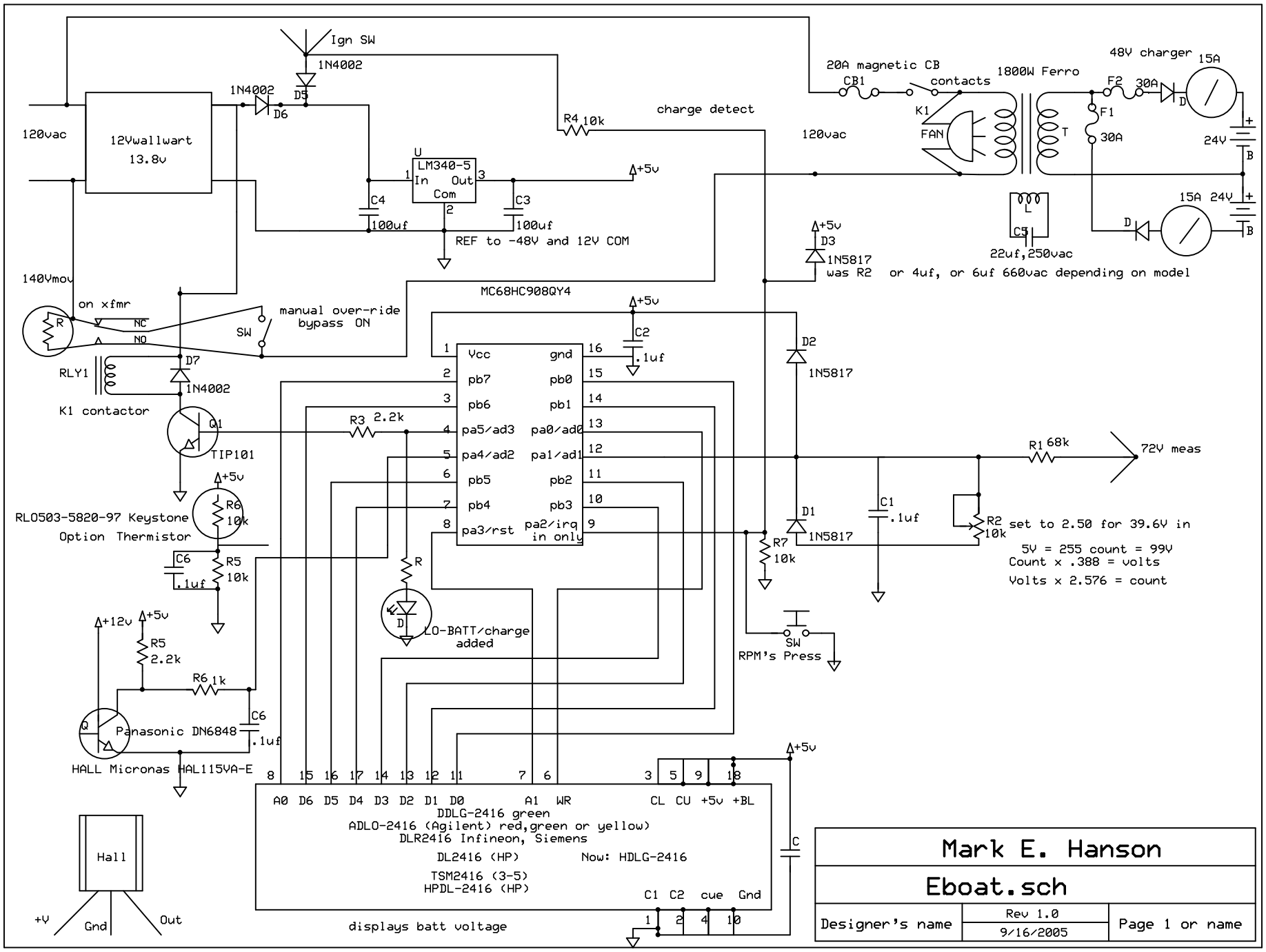
Ign SW
1N4002
1N4002
D5
D6
120vac
12Vwallwart
13.8v
U
LM340-5
In
Out
Com
C4
100uf
C3
100uf
REF to -48V and 12V COM
+5v
R4 10k
charge detect
20A magnetic CB
CB1
contacts
K1
FAN
120vac
1800W Ferro
T
F1
30A
F2
30A
48V charger
15A
24V
B
15A 24V
B
D
L
C5
22uf,250vac
D3
1N5817
was R2
or 4uf, or 6uf 660vac depending on model
140Vmov
on xfmr
R
NC
NO
SW
manual over-ride
bypass ON
RLY1
D7
1N4002
K1 contactor
Q1
TIP101
MC68HC908QY4
Vcc
gnd
pb7
pb0
pb6
pb1
pa5/ad3
pa0/ad0
pa4/ad2
pa1/ad1
pb5
pb2
pb4
pb3
pa3/rst
pa2/irq
in only
C2
.1uf
D2
1N5817
R3 2.2k
R1 68k
72V meas
RL0503-5820-97 Keystone
Option Thermistor
R6
10k
C6
.1uf
R5
10k
D1
1N5817
C1
.1uf
R2
10k
set to 2.50 for 39.6V in
5V = 255 count = 99V
Count x .388 = volts
Volts x 2.576 = count
R7
10k
R
D
LO-BATT/charge
added
SW
RPM's Press
+12v
R5
2.2k
R6 1k
C6
.1uf
Q
Panasonic DN6848
HALL Micronas HAL115VA-E
A0 D6 D5 D4 D3 D2 D1 D0 A1 WR
CL CU +5v +BL
DDLG-2416 green
ADLO-2416 (Agilent) red,green or yellow)
DLR2416 Infineon, Siemens
DL2416 (HP)
Now: HDLG-2416
TSM2416 (3-5)
HPDL-2416 (HP)
C1 C2 cue Gnd
displays batt voltage
C
Hall
+V
Gnd
Out
Mark E. Hanson
Eboat.sch
Designer's name
Rev 1.0
9/16/2005
Page 1 or name