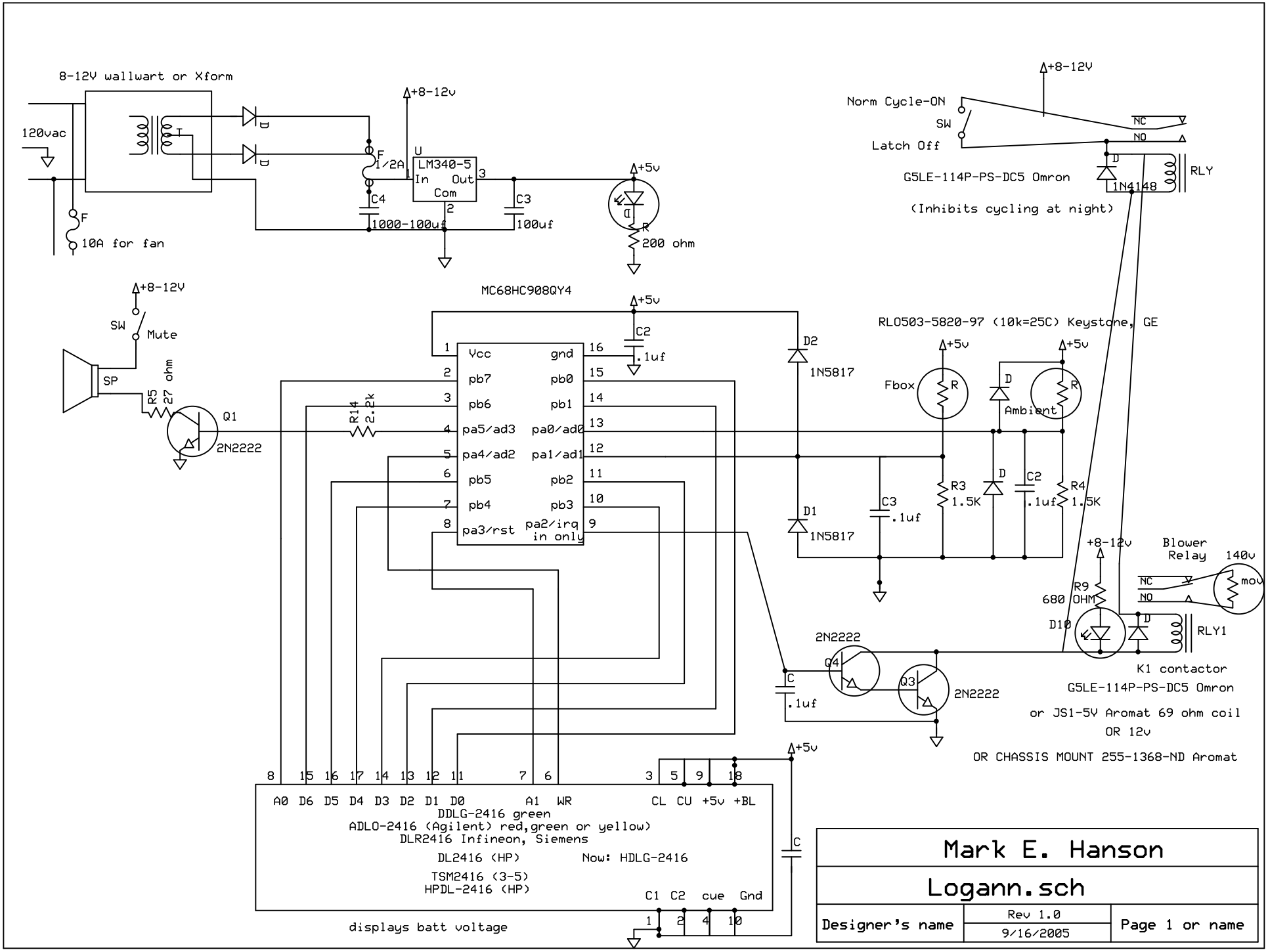
8-12V wallwart or Xform
120vac
F
10A for fan
+8-12v
F
1/2A
U
LM340-5
In
Out
Com
C4
1000-100uf
C3
100uf
+5v
D
R
200 ohm
+8-12V
SW
Mute
SP
R5
27 ohm
Q1
2N2222
MC68HC908QY4
+5v
C2
.1uf
Vcc
gnd
pb7
pb0
pb6
pb1
pa5/ad3
pa0/ad0
pa4/ad2
pa1/ad1
pb5
pb2
pb4
pb3
pa3/rst
pa2/irq
in only
R14
2.2k
D2
1N5817
D1
1N5817
C3
.1uf
+8-12V
Norm Cycle-ON
SW
Latch Off
NC
NO
G5LE-114P-PS-DC5 Omron
1N4148
RLY
(Inhibits cycling at night)
RL0503-5820-97 (10k=25C) Keystone, GE
+5v
Fbox
R
D
Ambient
R3
1.5K
C2
.1uf
R4
1.5K
+8-12v
R9
680 OHM
D10
Blower
Relay
140v
mov
RLY1
K1 contactor
G5LE-114P-PS-DC5 Omron
or JS1-5Y Aromat 69 ohm coil
OR 12v
OR CHASSIS MOUNT 255-1368-ND Aromat
2N2222
Q4
Q3
2N2222
C
.1uf
+5v
A0 D6 D5 D4 D3 D2 D1 D0 A1 WR CL CU +5v +BL
DDLG-2416 green
ADLO-2416 (Agilent) red,green or yellow)
DLR2416 Infineon, Siemens
DL2416 (HP)
Now: HDLG-2416
TSM2416 (3-5)
HPDL-2416 (HP)
C1 C2 cue Gnd
displays batt voltage
Mark E. Hanson
Logann.sch
Designer's name
Rev 1.0
9/16/2005
Page 1 or name