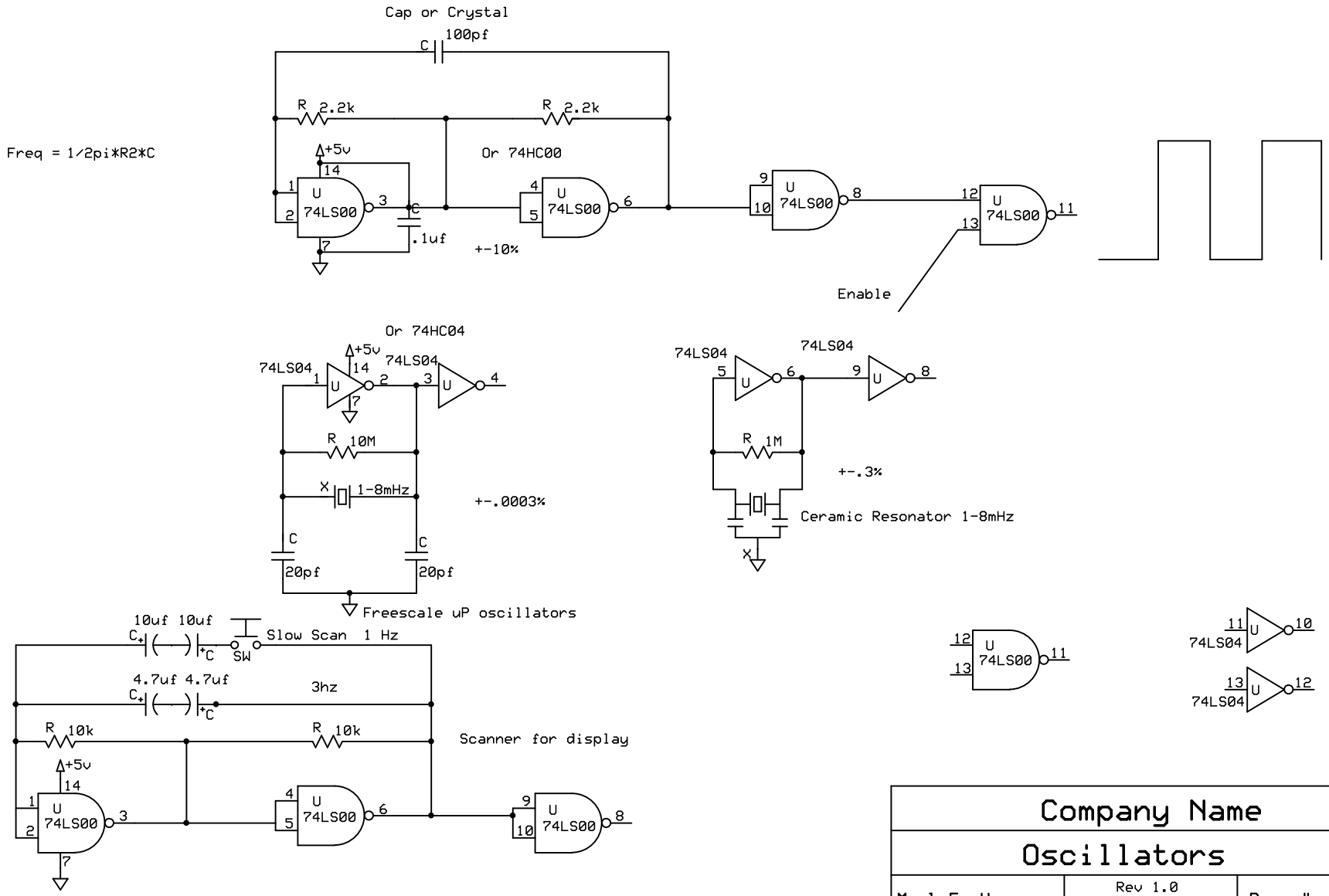

Company Name		
Oscillators		
Mark E. Hanson	Rev 1.0 2/5/2008	Page # or name